REVISION RECORD 修 改 紀 錄					
REV	ECO	DESCRIPTION	DATE	DRFT	CHKD

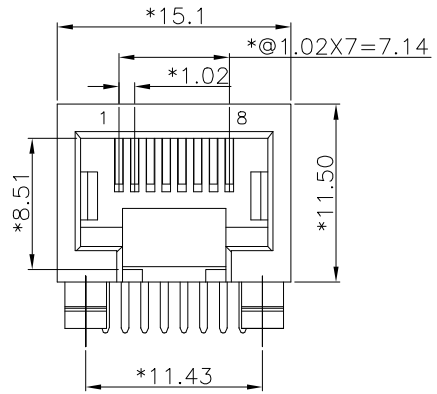

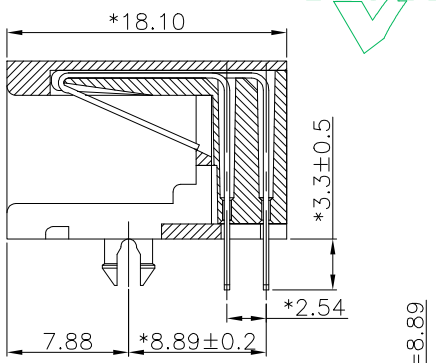

SECTION A–A

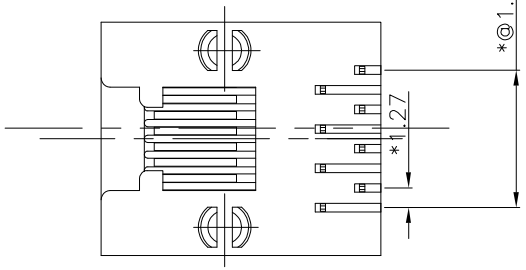

NOTES:

ELECTRICAL:

1. VOLTAGE RATING : 125 VAC RMS.
2. CURRENT RATING : 1.5 AMP.
3. CONTACT RESISTANCE : 35 MILLIOHMS MAX.
4. INSULATION RESISTANCE: 1000 MEGOHMS MIN @ 500 VDC.
5. DIELECTRIC STRENGTH : 1000 VDC RMS 60Hz, 1MIN.

MECHANICAL:

1. HOUSING MATERIAL : PBT UL94V–0.
2. CONTACT MATERIAL : PHOSPHOR BRONZE t=0.35mm.
3. PLATING : GOLD PLATING OVER NICKEL.
4. OPERATING LIFE : 750 CYCLES MIN.
5. PCB RETENTION PRE–SOLDER : 1 LB MIN.
6. PCB RETENTION POST–SOLDER: 10 LBS MIN.

ENVIRONMENTAL:

1. STORAGE : –40°C TO +85°C.
2. OPERATION: –40°C TO +85°C.
3. WAVE SOLDERING TEMPERTURE: 235–245°C 3–5 SECONDS.
4. RoHS COMPLIANT.

MATES WITH MODULAR PLUG CONFORMING TO FCC PART 68, SUBPART F.

CUL FILE NO. E345295

RoHS PART NUMBER: EL268X-3AXXS1X

NO. OF CONTACT: 8-8C

1-3u" 2-6u"
3-15u" 4-30u"
5-50u" F-GOLD FLASH

03-W/O LOGO PBT BLACK

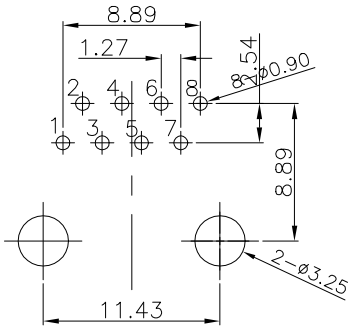

PCB T=1.60mm

PC BOARD LAYOUT COMPONENT SIDE SHOWN

Tolerance±0.05

單位: mm		DFTO: Rose	DATE: 2018.06.04	ELLAX CORPORATION		
長度公差	角度公差	CHKD: Jerry	DATE: 2018.06.04	TITLE: 11.5 Side Entry 8P		
.0±0.25	0°±5°	APPVL: W.B.Huang	DATE: 2018.06.04			
.00±0.15		脫模角:	顏色:			
.000±0.10			MATERIAL: 材 質			
			TREAT: 處 理	DWG NO. EL2688-3A03S1F	SIZE	REV
			QTY: 數 量	DRAWING NO: 圖檔編號 EL268X-3AXXS1X	A4	A
THIRD ANGLE PROJECTION			SCALE: 比 例 1 : 1	PART NO: 零件編號	1 of 1	